OMNI-414

POYNTING
BEYOND A CONNECTED LIFE

ANTENNAS | OMNI-414 SERIES

OMNI-DIRECTIONAL, MARINE, 4x4 MIMO 5G/LTE ANTENNA

617 – 3800 MHz, 3.5 dBi

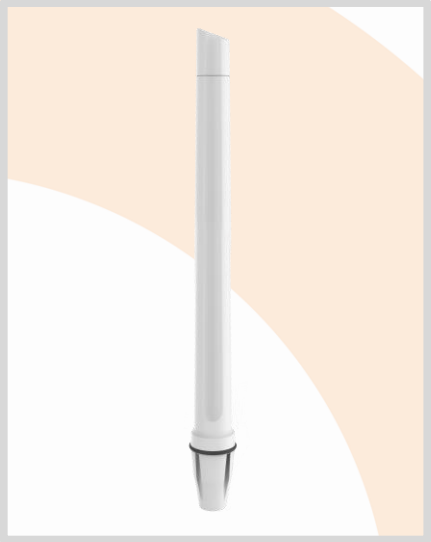

617 – 960 MHz
1427 – 1517 MHz
1710 – 2700 MHz
3400 – 3800 MHz

3.5 dBi

Increase X Mb/s

Omni-Directional

4G LTE

5G

617 – 698 MHz

CBRS Band

-40°C to +80°C

Salt Spray Protection

4X4 MIMO

IP 68

- **Ultra-wideband, omni-directional marine & coastal antenna**
- **4x4 MIMO capability for improved performance**
- **Covers contemporary LTE/5G bands from 617 to 3800 MHz**
- **UV and saltwater protected for marine and coastal conditions**
- **Robust and all-weather proof for harsh conditions at sea (IP 68)**
- **Various 316 stainless steel mounting brackets available optionally**

APPLICATION AREAS

Marine

Urban

Rural/Farm

Industrial

Product Overview

The OMNI-414 is an ultra-wideband antenna, which covers all contemporary LTE/5G frequency bands with excellent balanced gain across all frequencies from 617 to 3800 MHz. The antenna also offers 4x4 MIMO capability from its vertically separated radiating elements, all in the same single radome. The antenna design allows for superior pattern control over the entire frequency range, making the OMNI-414 a true omni-directional 4x4 MIMO antenna, suitable for marine and coastal applications. The antenna also comes with an IP68 protection rating against dust and water ingress, making it ideal for most severe storms at sea. The radome is also fully salt water protected so that it can be used in highly corrosive environments, thanks to the UV stable ASA radome material. The OMNI-414 guarantees signal reception almost everywhere and is usable in all part of the world. The ultra-wideband performance makes the antenna future proof, as it covers LTE Band 71 (617 to 698 MHz) as well as the CBRS bands from 3400 to 3800 MHz for inland use.

Features

- 4x4 MIMO capable for improved performance
- Wideband omni-directional antenna (617 to 3800 MHz)
- Includes Band 71 (617 to 698 MHz) and 3.5 GHz 5G band
- Robust and weather resistant enclosure with IP 68 rating
- UV and salt-water resistant enclosure

Application Areas

- Marine applications: Yachts / Boats / Ferries
- Enhanced LTE/4G and 5G reception
- Increase system transmission reliability
- High-end industrial grade router applications
- Industrial and commercial LTE/5G deployment
- Agricultural and farming LTE/5G data distribution

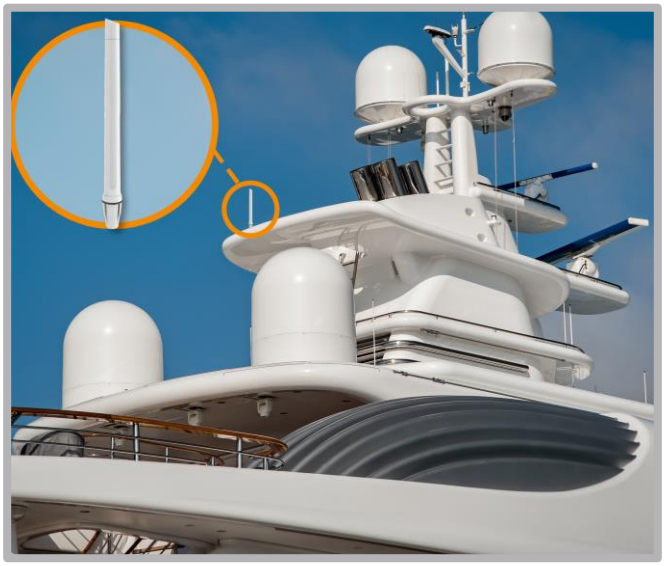

©2022 Poynting Antennas (Pty) Ltd. All rights reserved
Product Specifications may change without prior notice
Revised: May 2022

Regulatory Compliance: RoHS 2011/65/EU Compliant | ISO 9001:2015
Document version: TS-OMNI-0414-V1-01 REV 2.0
www.poynting.tech

Frequency Band

The OMNI-414 is an Omni-directional antenna that works from 617 – 960 MHz | 1427 – 1517 MHz | 1710 – 2700 MHz | and | 3400 – 3800 MHz |

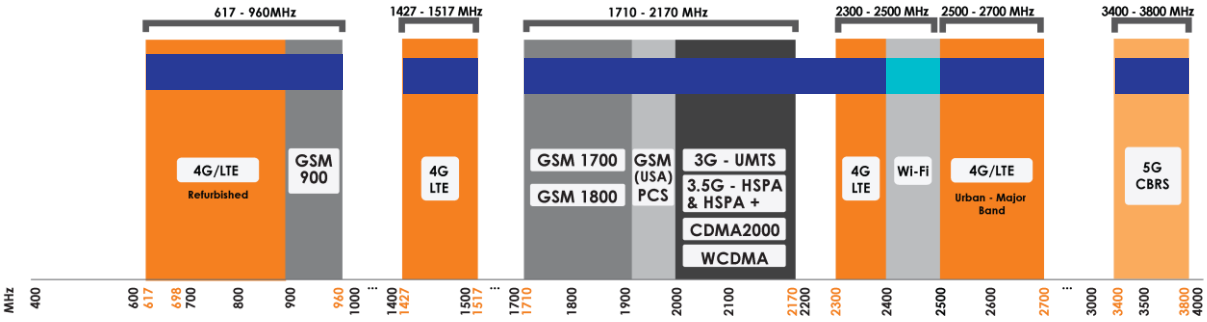

Indicates the LTE bands on which OMNI-414 works

Indicates the WI-FI bands on which OMNI-414 works

Antenna Overview

	LTE
Ports	4
SISO / MIMO	MIMO
Frequency Bands	617 MHz - 3800 MHz
Polarisation	Linear (Vertical)
Peak Gain	3.5 dBi
Coax Cable Type	2 x Twin HDF 195
Coax Cable Length	2m
Connector Type	SMA (M)

**The coax cable & connector are factory mounted to the antenna*

©2022 Poynting Antennas (Pty) Ltd. All rights reserved
Product Specifications may change without prior notice
Revised: May 2022

Regulatory Compliance: RoHS 2011/65/EU Compliant | ISO 9001:2015
Document version: TS-OMNI-0414-V1-01 REV 2.0
www.poynting.tech

Electrical Specification

Frequency Bands:	617 – 960 MHz 1427 – 1517 MHz 1710 – 2700 MHz 3400 – 3800 MHz
Gain (Max):	-0.5 dBi @ 617 – 960 MHz 1 dBi @ 1427 – 1517 MHz 3.5 dBi @ 1710 – 2700 MHz 1.8 dBi @ 3400 – 3800 MHz
Gain (Mean):	-2 dBi @ 617 – 960 MHz -1 dBi @ 1427 – 1517 MHz 0.5 dBi @ 1710 – 2700 MHz 0 dBi @ 3400 – 3800 MHz
VSWR:	<2:1 across 90% of the bands
Feed Power Handling:	10 W
Input Impedance:	50 Ohm (nominal)
Polarisation:	Linear Vertical
Coax Cable Loss:	0.385 dB/m @ 900 MHz 0.507 dB/m @ 1500 MHz 0.565 dB/m @ 1800 MHz 0.666 dB/m @ 2400 MHz 0.788 dB/m @ 3000 MHz
DC Short:	Yes

Product Box Content

Antenna:	A-OMNI-0414-V1-01
Mounting Bracket:	1" (14 TPI) Marine Adapter (BRKT-40) & L-bracket (Ø30-50mm Pole)

Ordering Information

Commercial Name:	OMNI-414
Order Product Code:	A-OMNI-0414-V1-01
EAN Number:	6009710923504

Mechanical Specification

Product Dimensions:	750 mm x Ø75 mm (Incl. BRKT-40)
Packaged Dimensions:	705 mm x 150 mm x 100 mm
Weight:	0.86 kg
Packaged Weight:	1.90 kg
Radome Material:	UV Stable Marine ASA
Radome Colour:	Brilliant White Pantone P 179-1C
Mounting Type:	Standard 1" -14 TPI marine mount & Wall/pole mount

Environmental Specifications, Certification & Approvals

Wind Survival:	<160 km/h
Temperature Range (Operating):	-40°C to +80°C
Environmental Conditions:	Outdoor/Indoor
Water Ingress Protection Ratio/Standard:	IP 68
Salt Spray:	MIL-STD 810G/ASTM B117
Operating Relative Humidity:	Up to 98%
Storage Humidity:	5% to 95% - non-condensing
Storage Temperature:	-40°C to +80°C
Enclosure Flammability Rating:	UL 94-HB
Impact Resistance:	IK 08
Product Safety & Environmental:	Complies with CE and RoHS standards

©2022 Poynting Antennas (Pty) Ltd. All rights reserved
Product Specifications may change without prior notice
Revised: May 2022

Regulatory Compliance: RoHS 2011/65/EU Compliant | ISO 9001:2015
Document version: TS-OMNI-0414-V1-01 REV 2.0
www.poynting.tech

Antenna Performance Plots

VSWR: Cell 1

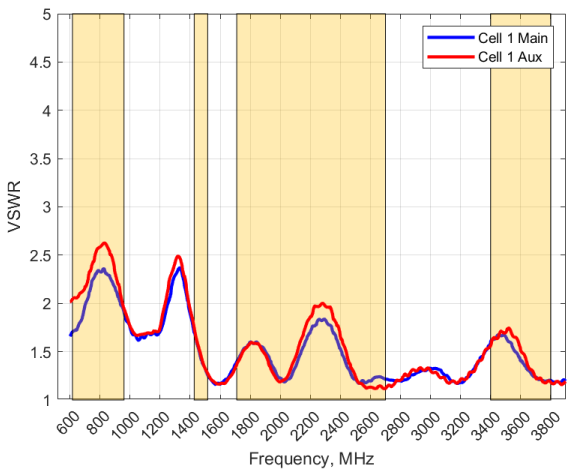

Voltage Standing Wave Ratio (VSWR)*

VSWR is a measure of how efficiently radio-frequency power is transmitted from a power source, through a transmission line, into a load. In an ideal system, 100% of the energy is transmitted which corresponds to a VSWR of 1:1.

The OMNI-414 delivers superior performance across all bands with a VSWR of 2:1 or better across 90% of the bands.

**VSWR measured with a 2m low loss cable*

VSWR: Cell 2

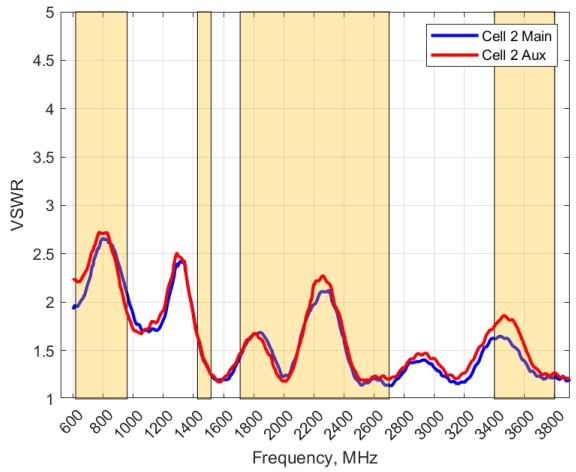

Voltage Standing Wave Ratio (VSWR)*

VSWR is a measure of how efficiently radio-frequency power is transmitted from a power source, through a transmission line, into a load. In an ideal system, 100% of the energy is transmitted which corresponds to a VSWR of 1:1.

The OMNI-414 delivers superior performance across all bands with a VSWR of 2:1 or better across 90% of the bands.

**VSWR measured with a 2m low loss cable*

GAIN (EXCLUDING CABLE LOSS)

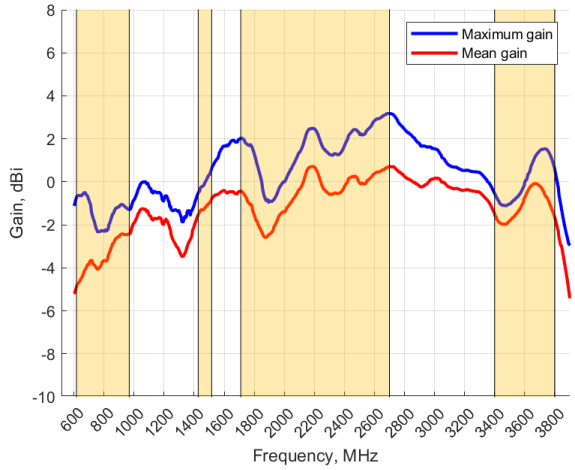

Gain+ in dBi

3.5 dBi is the peak gain across all bands from 617 – 3800 MHz

Gain @ 617 – 960 MHz (Max; Mean):	-0.5 dBi ; -2 dBi
Gain @ 1427-1517 MHz (Max; Mean):	1 dBi ; -1 dBi
Gain @ 1710 – 2700 MHz (Max; Mean):	3.5 dBi ; 0.5 dBi
Gain @ 3400 – 3800 MHz (Max; Mean):	1.8 dBi ; 0 dBi

+Antenna gain measured with polarisation aligned standard antenna

ISOLATION

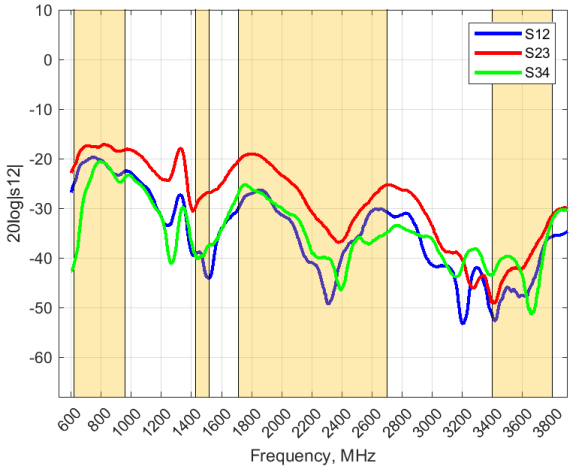

Isolation

Isolation is a measure of the amount of energy leaked from one port to another. In an ideal case no energy should leak from port one to port another.

©2022 Poynting Antennas (Pty) Ltd. All rights reserved
Product Specifications may change without prior notice
Revised: May 2022

Regulatory Compliance: RoHS 2011/65/EU Compliant | ISO 9001:2015
Document version: TS-OMNI-0414-V1-01 REV 2.0
www.poynting.tech

Technical Drawings

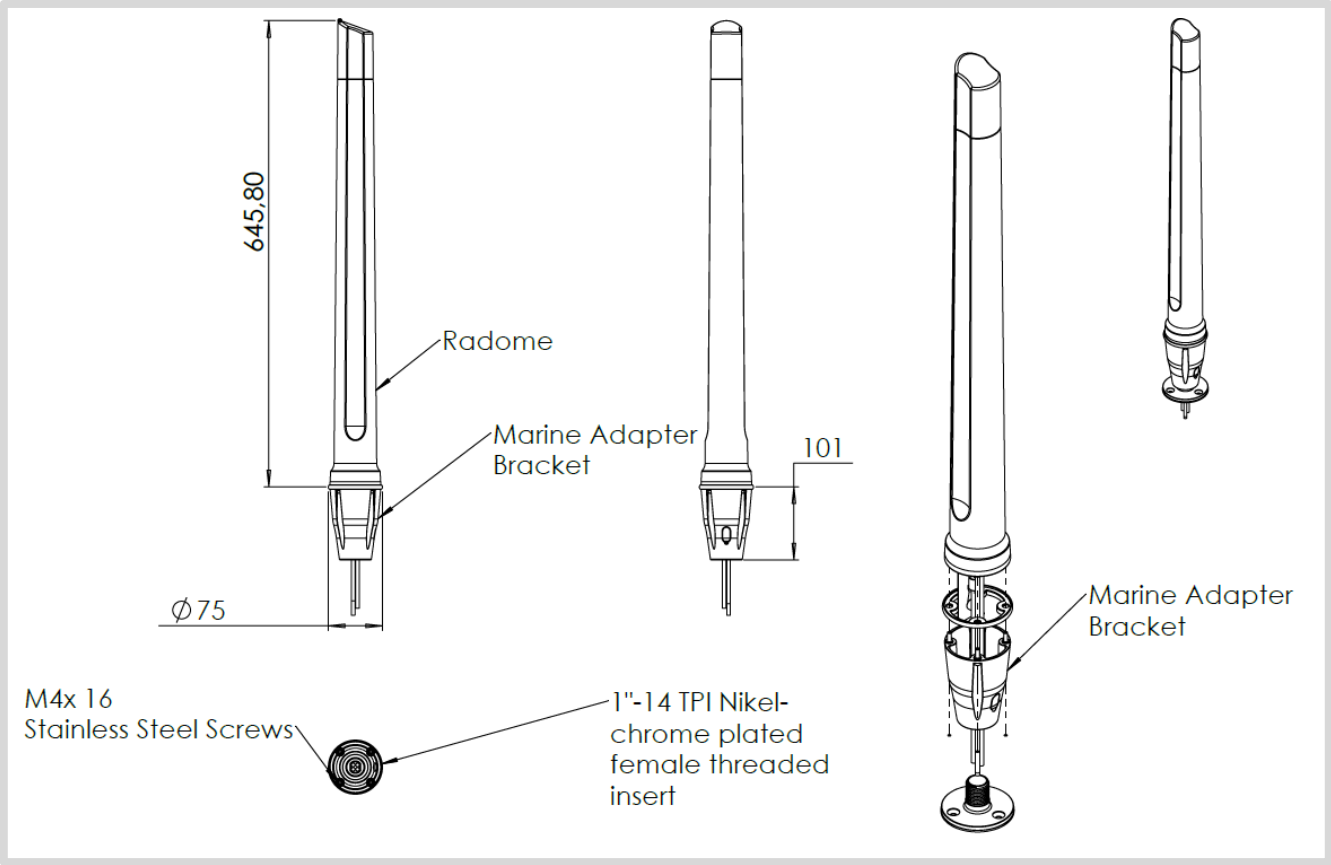

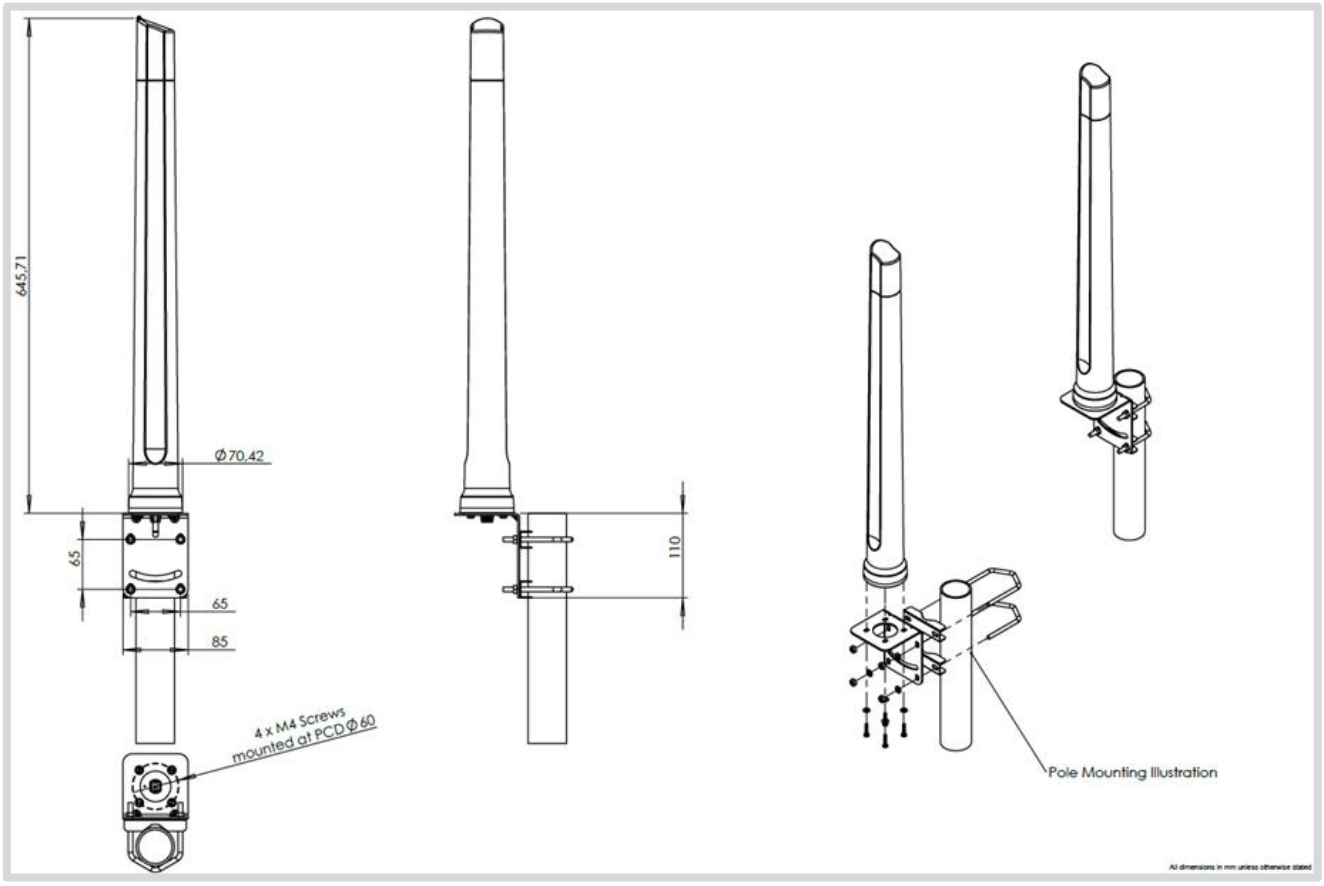

©2022 Poynting Antennas (Pty) Ltd. All rights reserved
Product Specifications may change without prior notice
Revised: May 2022

Regulatory Compliance: RoHS 2011/65/EU Compliant | ISO 9001:2015
Document version: TS-OMNI-0414-V1-01 REV 2.0
www.poynting.tech

Radiation Patterns

Azimuth: 617 – 960 MHz

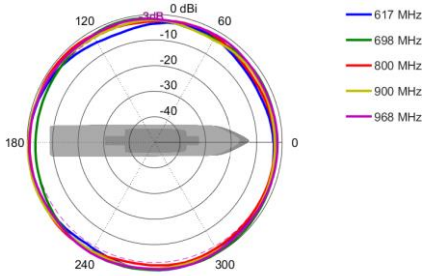

Azimuth: 1427 – 1517 MHz

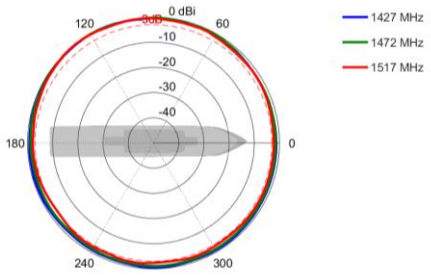

Azimuth: 1710 – 2170 MHz

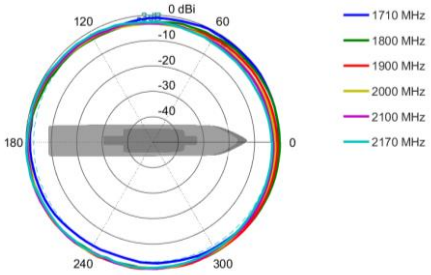

Azimuth: 2300 – 2700 MHz

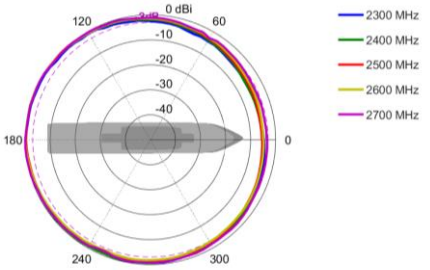

Azimuth: 3400 – 3800 MHz

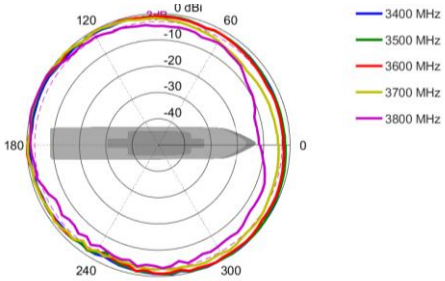

Elevation: 617 – 960 MHz

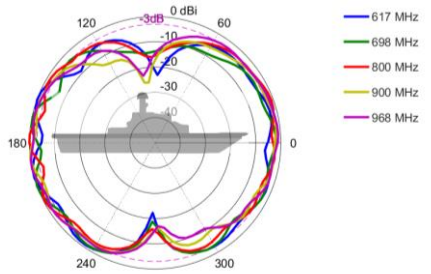

Elevation: 1427 – 1517 MHz

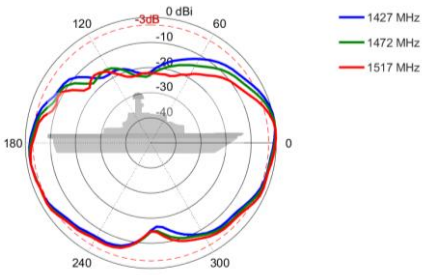

Elevation: 1710 – 2170 MHz

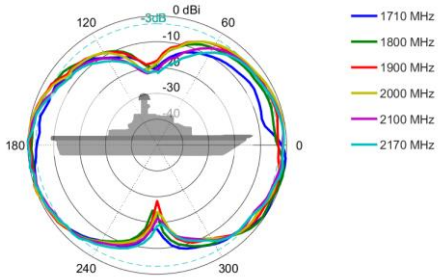

Elevation: 2300 – 2700 MHz

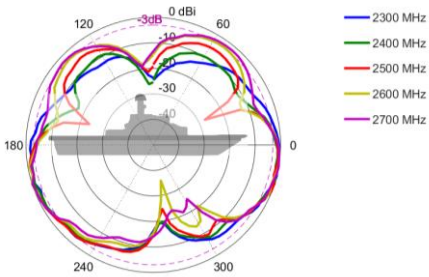

Elevation: 3400 – 3800 MHz

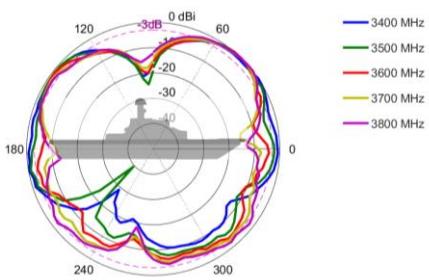

©2022 Poynting Antennas (Pty) Ltd. All rights reserved
Product Specifications may change without prior notice
Revised: May 2022

Regulatory Compliance: RoHS 2011/65/EU Compliant | ISO 9001:2015
Document version: TS-OMNI-0414-V1-01 REV 2.0
www.poynting.tech

Mounting Options

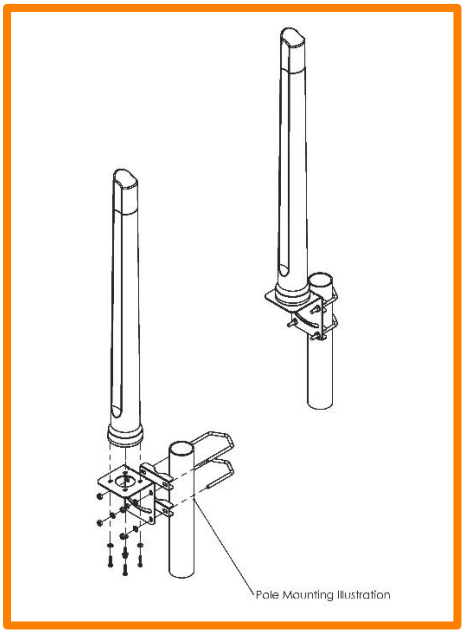

Pole Mount

L-Bracket 316 Stainless Steel – included

(for Ø 30-50mm pole)

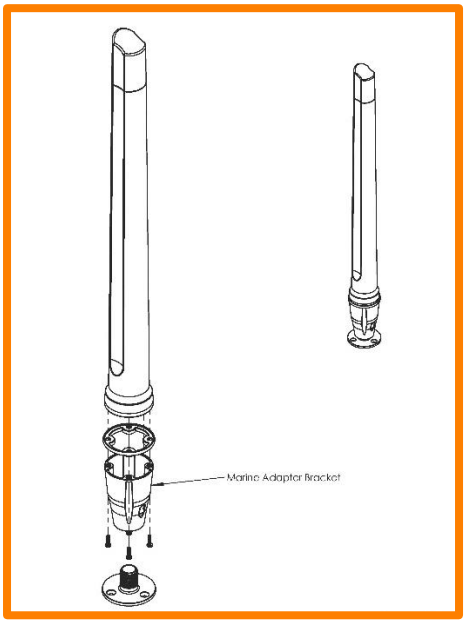

Marine Bracket Mount

1" -14 TPI female adapter – included

Mounts to standard marine brackets:

- BRKT-37: Flat Mount - Optional
- BRKT-38: Ratchet Mount - Optional
- BRKT-39: Rail Mount - Optional

See Optional Accessories below

Also available: BRKT-41 with 1.25" – 11TPI female adapter (Optional)

See Accessories below

©2022 Poynting Antennas (Pty) Ltd. All rights reserved
Product Specifications may change without prior notice
Revised: May 2022

Regulatory Compliance: RoHS 2011/65/EU Compliant | ISO 9001:2015
Document version: TS-OMNI-0414-V1-01 REV 2.0
www.poynting.tech

Additional Accessories



BRKT-37

Marine flat mount antenna bracket 1"-14TPI 316 Stainless Steel



BRKT-38

Marine ratchet rail mount antenna bracket 1"-14TPI 316 Stainless Steel



BRKT-39

Heavy duty marine mount antenna bracket 1"-14TPI 316 Stainless Steel

See accessories technical specifications on www.poynting.tech

CONTACT POYNTING

Poynting Antennas (Pty) Ltd - Head Office
Unit 4, N1 Industrial Park,
Landmarks Avenue,
Samrand, 0157, South Africa
Phone: +27 (0) 12 657 0050
E-mail: info@poynting.tech
International Email: sales-global@poynting.tech

Poynting Europe
Regus Business Center Neue Messe Riem
Kronstadter Straße 4
81677 München
Germany
Phone: +49 89 7453 9002
E-mail: sales-europe@poynting.tech

Poynting USA
1804 Owen Court, Suite 104,
Mansfield,
TX 76063
USA
Phone: +1 817 533-8130
E-mail: sales-us@poynting.tech